CEMB USA

WHEEL SERVICE EQUIPMENT

ED. 12/2016

PART CATALOGUE

SM645

TIRE CHANGER

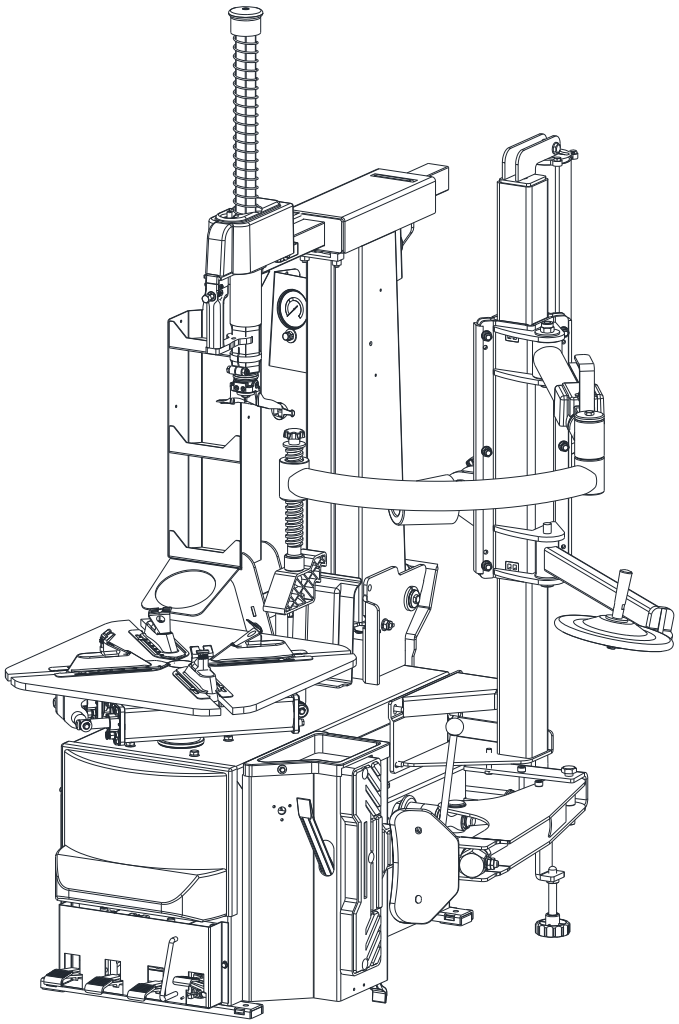

TAV.1.0	BODY	ED. 10/16

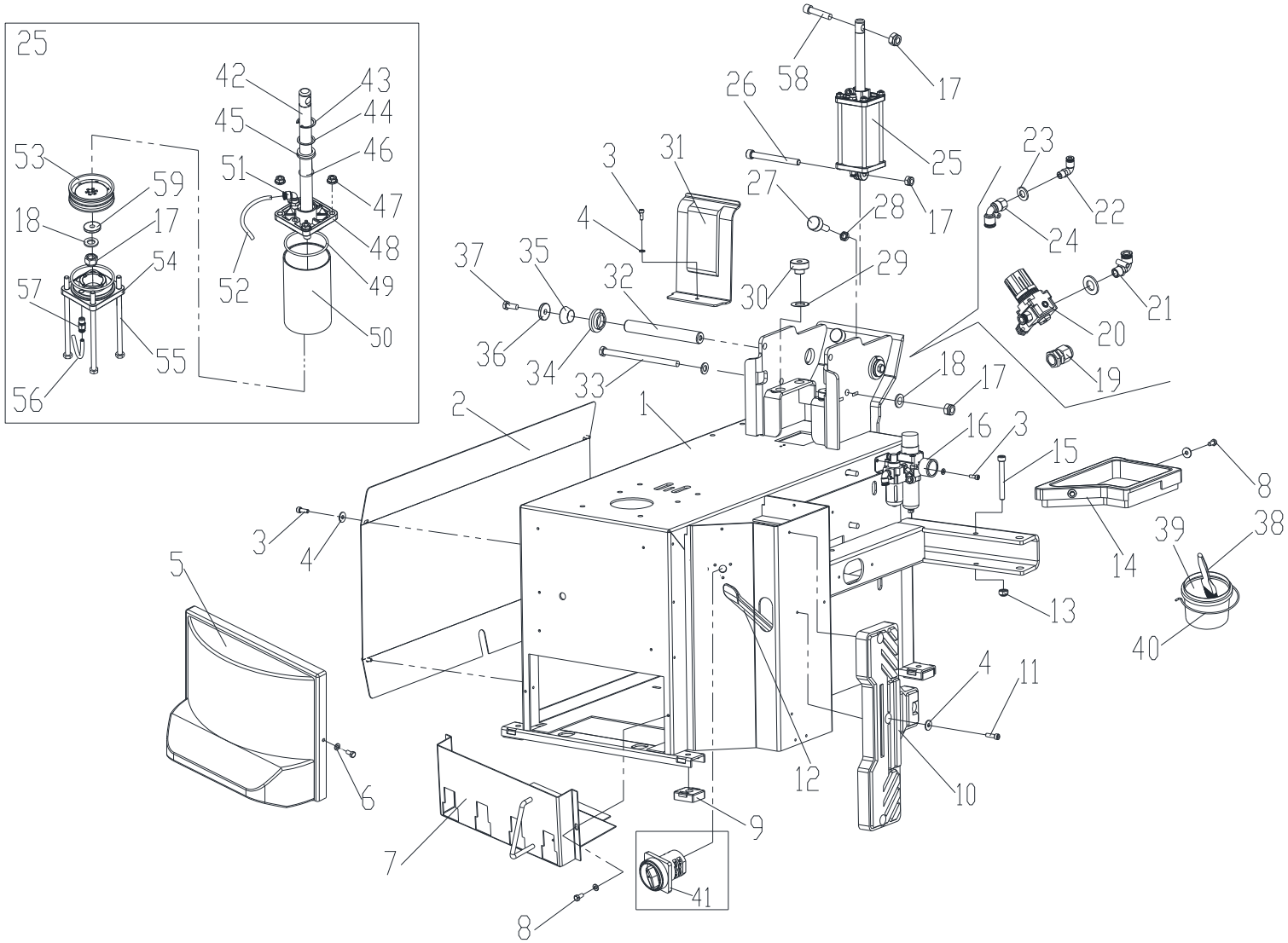

REV. 12 2016

TAV.1.0	BODY	ED. 10/16

ITEM	PART NUMBER	DESCRIPTION	QTY	REMARK
1	C26C100100	Body	1	
2	C200000002	Side cover	1	
3	0202032	Screw M6X16 - GB/T70.1	7	
4	0205007	Washer D.6 - GB/T96	10	
5	C24E1000001	Plastic cover	1	
6	0205006	Washer D.6 - GB/T97.1	7	
7	YC2-2412453	Pedal support	1	
8	0201011	Screw M6X12 - GB/T5783	6	
9	YC1-3002099	Plastic foot	4	
10	YC1-3002102	Wheel support	1	
11	0202033	Screw M6X20 - GB/T70.1	4	
12	0511242	Lever	1	
13	0204005	Nut M10 - GB/T889.1	1	
14	YC2-3011972	Plastic cover	1	
15	0202067	Screw M10X85 - GB/T70.1	1	
16	YC2-2012326-2	SMC lubricator + filter regulator	1	
17	0204007	Nut M12 - GB/T889.1	4	
18	0205013	Washer D.12 - GB/T97.1	4	
19	0507115	Cable relief	1	
20	YC2-2010781-1	Safety valve unit 3.5bar	1	
21	0306037	90° quick union 8-1/4	1	
22	0306035	90° quick union 4-1/8	1	
23	0205011	Washer D.10 - GB/T97.1	1	
24	0306034	90° union 8-1/8	1	
25	YC2-2002831	Tilting cylinder	1	
26	0202069	Screw M12X120 - GB/T70.1	1	
27	C22A030001	Pad	2	

28	0204016	Nut M12 - GB/T6172.1	2
29	C33A200007	Pad	2
30	C33A200001	Pad	2
31	YC2-3012450	Protection	1
32	YC2-3000206	Shaft	1
33	0201207	Screw M12X190 - GB/T5783	1
34	C33A000005	Pin washer	2
35	C33A000006	Conical bush	2
36	YC2-3000495	Washer	2
37	0201064	Screw M10X25 - GB/T5783	2
38	0511063	Grease brush	1
39	YC1-4299984	Grease cup	1
40	YC1-3000069	Spring	1
41	0505008	Dual speed switch	1
42	YC2-3002624	Piston rod	1
43	0211004	Seeger D.30 - GB/T893.1	1
44	YC1-4398146	Washer	1
45	0606016	Scraper 20X30X7	1
46	0606004	O-ring 20X2.75 - GB/T3452.1	1
47	0204025	Flange nut M8 GB/T6177.1	4
48	YC1-3015024A	Flange	1
49	0606007	O-ring 75X3.55 - GB/T3452.1	2
50	YC2-3008084	Cylinder liner	1
51	0306046	Quick union 6-1/8	1
52	0306095	Rilsan hose 6X4 L=1200	1
53	YC1-4198856	Piston	1
54	YC1-3015023A	Flange	1

55	0201027	Screw M8X162	4
56	0306095	Rilsan hose 6X4 L=1100	1
57	0306036	90° quick union 6-1/8	1
58	0202077	Screw M12X55	1
59	YC1-4198857	Washer	1

TAV.2.0	HORIZ. AND VERT. ARMS	ED. 10/16

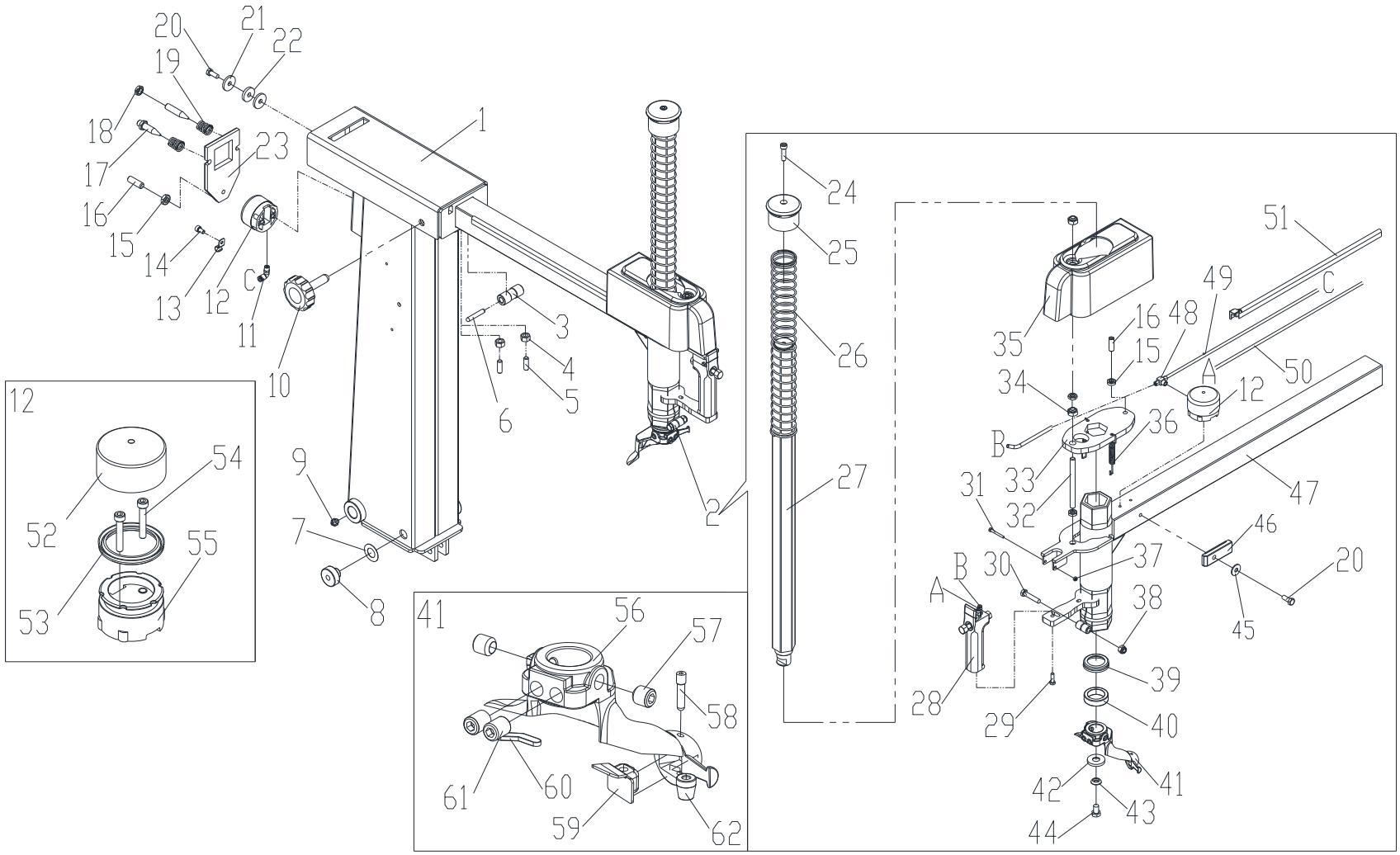

REV. 12 2016

ITEM	PART NUMBER	DESCRIPTION	QTY	REMARK
1	C26B300100	Vertical post	1	
2	C26C310000	Working arm assembly	1	
3	YC2-3002474	Roller	1	
4	0203032	Nut M10 - GB/T6170	2	
5	0209022	Screw M10X30	2	
6	0213102	Pin 12X88	1	
7	C33A200007	Pad	2	
8	C33A200001	Pad	2	
9	0215020	Oil cup 10X1	1	
10	YC2-2004020	Hand wheel	1	
11	0306035	90° quick union 4-1/8	1	
12	YC2-2099665	Locking cylinder	2	
13	C00A000016	Hose clamp	1	
14	0202030	Screw M6X10 - GB/T70.1	1	
15	0204012	Nut M10 - GB/T6172.1	6	
16	0209022	Screw M10X30 - GB/77	2	
17	YC2-3015677	Special screw	2	
18	0204016	Nut M12 - GB/T6172.1	2	
19	YC3-3005408	Spring	2	
20	0201042	Screw M8X20 - GB/T5783	2	
21	YC2-4399947	Washer	2	
22	YC2-3000181	Washer	1	
23	YC2-3015676	Arm locking plate	1	
24	0202049	Screw M8X30 - GB/T70.1	1	
25	YC1-3001759	Arm knob	1	
26	104-3005407	Spring	1	
27	YC2-3011391	Hexagonal arm	1	

28	YC2-2008335	Arm control valve	1
29	0201129	Screw M6X20	1
30	0201037	Screw M8X40 - GB/T5782	1
31	0201003	Screw M4X35 - GB/T5781	1
32	0213043	Special screw M10X120	1
33	YC2-3006106	Arm locking plate	1
34	0204005	Nut M10 - GB/T889.1	2
35	YC2-3015860	Arm frame	1
36	YC2-3002273	Spring	2
37	0204001	Nut M4 - GB/T889.1	1
38	0204004	Nut M8 - GB/T889.1	1
39	YC1-3002601	Shock absorber	1
40	YC1-3002602	Shock absorber protection	1
41	YC1-2002215	Mounting tool unit	1
42	YC1-4295804	Conical washer	1
43	YC1-4295805	Spherical washer	1
44	0201062	Screw M10X20 GB/T5783	1
45	0205009	Washer D.8 - GB/T96	1
46	YC2-3007935	Limit block	1
47	C26C310100	Horizontal arm	1
48	0306063	Tee rotation union 4-1/8	1
49	0306149	Rilsan hose 4X2.5 L=1300	1
50	0306126	Rilsan hose 4X2 L=2350	1
51	C33A200003	Guide	1
52	YC2-4299524	Cylinder liner	2
53	YC2-4299522	Sealing ring 60X50X5	2
54	0202027	Screw M6X35 - GB/T70.1	4

55	YC2-4299523	Piston	2
56	YC1-3007801	Mounting tool	1
57	0209020	Screw M12X12 - GB/T80	2
58	0215031	Shaft	1
59	YC1-3006689	Plastic insert	1
60	YC1-3013650	Plastic insert	1
61	0209015	Screw M12X16 - GB/T80	2
62	0215032	Peak roller	1

TAV.3.0	PEDAL BOX	ED. 10/16

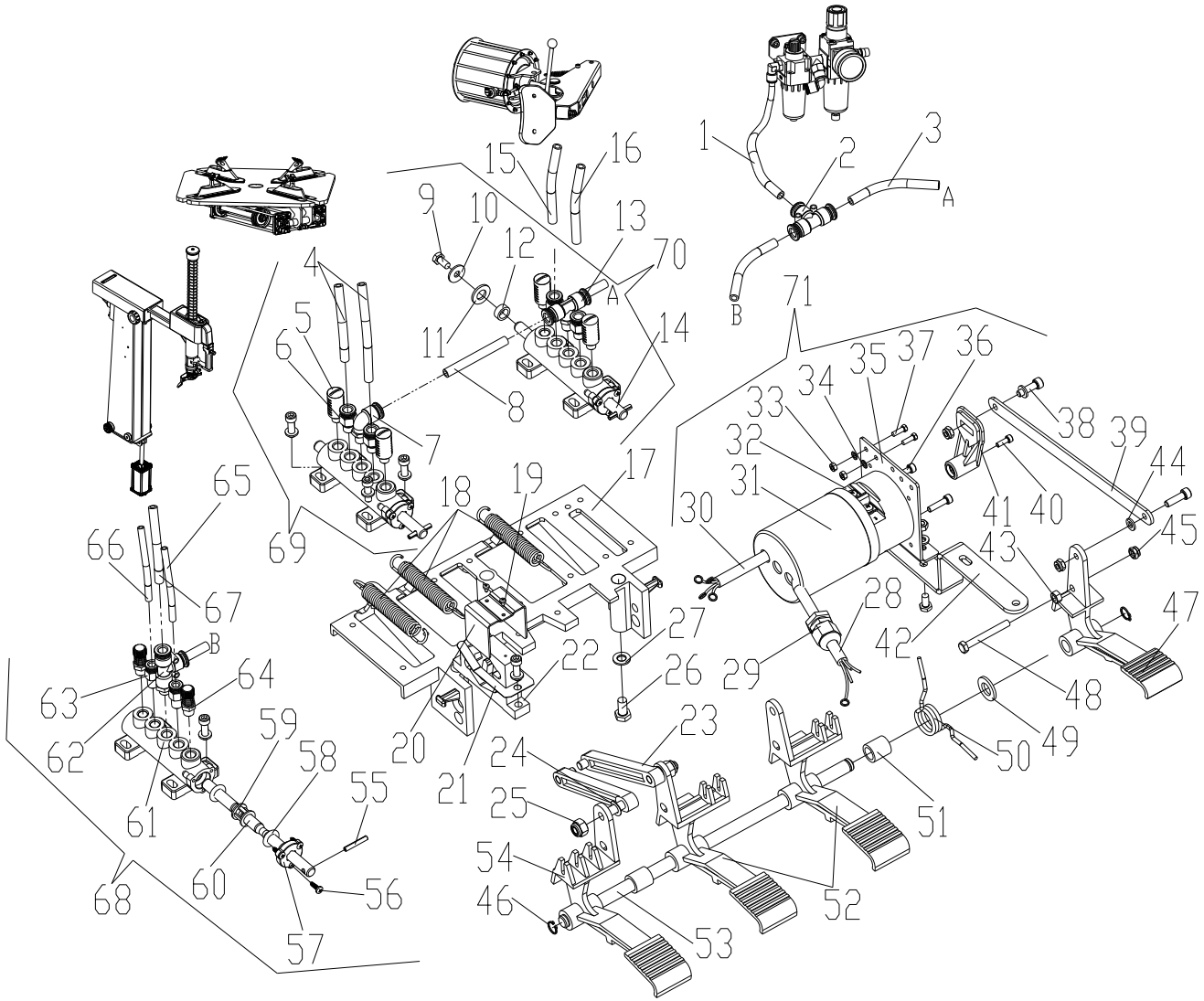

REV. 12 2016

TAV.3.0	PEDAL BOX	ED. 10/16

ITEM	PART NUMBER	DESCRIPTION	QTY	REMARK
1	0306097	Rilsan hose 8X5 L=1000	1	
2	0306022	Quick Tee union D.8	1	
3	0306097	Rilsan hose 8X5 L=270	2	
4	0306097	Rilsan hose 8X5 L=850	2	
5	0306059	Silencer 1/8	4	
6	0306045	Quick union 8-1/8	4	
7	0306033	90° quick union 8-R1/8	1	
8	0306097	Rilsan hose 8X5 L=70	1	
9	0201011	Screw M6X12 - GB/T5783	3	
10	0205007	Washer D.6 - GB/T96	1	
11	0205011	Washer D.10 - GB/T97.1	1	
12	YC1-4197629	Nylon washer	1	
13	0306023	Quick T union 8-1/8	1	
14	YC1-3007598	Valve pin 3	1	
15	0306097	Rilsan hose 8X5 L=700	1	
16	0306097	Rilsan hose 8X5 L=800	1	
17	YC1-3002161	Pedal box base	1	
18	YC1-3013333	Pedal return spring	3	
19	0207034	Self-tapping screw ST2.9X6.5 - GB/T845	2	
20	YC1-3099910	Connection rod guide	1	
21	YC2-4299910	Forked leaf spring	1	
22	YC1-4299913	Double cam	1	
23	YC1-4299912	Connection rod	2	
24	0215019	Washer D.8 - GB/T860	2	
25	0204004	Nut M8 - GB/T889.1	2	
26	0201026	Screw M8X16 - GB/T5783	3	
27	0205008	Washer D.8 - GB/T97.1	3	

28	0506016	Power cable L=3500	1
29	0507115	Cable relief	1
30	0506016	Motor cable L=1500	1
31	YC1-3015344	Reverser cover	1
32	0505009	Reverser 40A	1
33	0203002	Nut M4 - GB52	2
34	0211016	Washer D.4 - GB/T862.2	2
35	YC1-3015340	Reverser support	1
36	0202021	Screw M5X20 - GB/T70.1	2
37	0201004	Screw M4X12 - GB/T5781	2
38	0202033	Screw M6X20 - GB/T70.1	12
39	YC1-3015341	Connection rod	1
40	0202004	Screw M4X12 - GB/T70.1	1
41	YC1-3000175	Reverser lever	1
42	YC1-3015342	Support	1
43	0203004	Nut M6 - GB52	3
44	0205006	Washer D.6 - GB/T97.1	14
45	0204003	Nut M6 - GB/T889.1	3
46	0212001	Seeger D.12 - GB/T894.1	2
47	YC1-3002157	Pedal A	1
48	0201016	Screw M6X50 - GB/T5782	1
49	0205013	Washer D.12 - GB/T97.1	1
50	YC1-3000142	Pedal control spring	1
51	YC1-3007953	Bush	2
52	YC1-3002159	Pedal B	2
53	YC2-3003095	Pedal alignment pin	1
54	YC2-3002160	Pedal C	1

55	0213003	Elastic pin 4X25 - GB/T879.1	3
56	0207032	Self-tapping screw ST3.5X13 - GB/T845	9
57	YC1-3001585	Valve flange	3
58	YC1-4299000	O-ring 17X4	18
59	YC1-3001584	Valve spacer	15
60	YC1-3002442	Valve pin 1	2
61	YC1-3001583	Valve body	3
62	0306021	Quick T union 8-1/8	1
63	0306046	Quick union 6-1/8	2
64	0306013	Silencer outlet adjuster 1/8	2
65	0306095	Rilsan hose 6X4 L=1200	1
66	0306095	Rilsan hose 6X4 L=1000	1
67	0306097	Rilsan hose 8X5 L=1200	1
68	YC2-2002531	Tilting control valve unit	1
69	YC1-2002529	Turntable valve unit	1
70	YC1-2006297	Bead breaking valve unit	1
71	YC1-2002002	Reverser assembly	1

TAV.4.0	MOTOR – REDUCTION GEAR GROUP	ED. 10/16

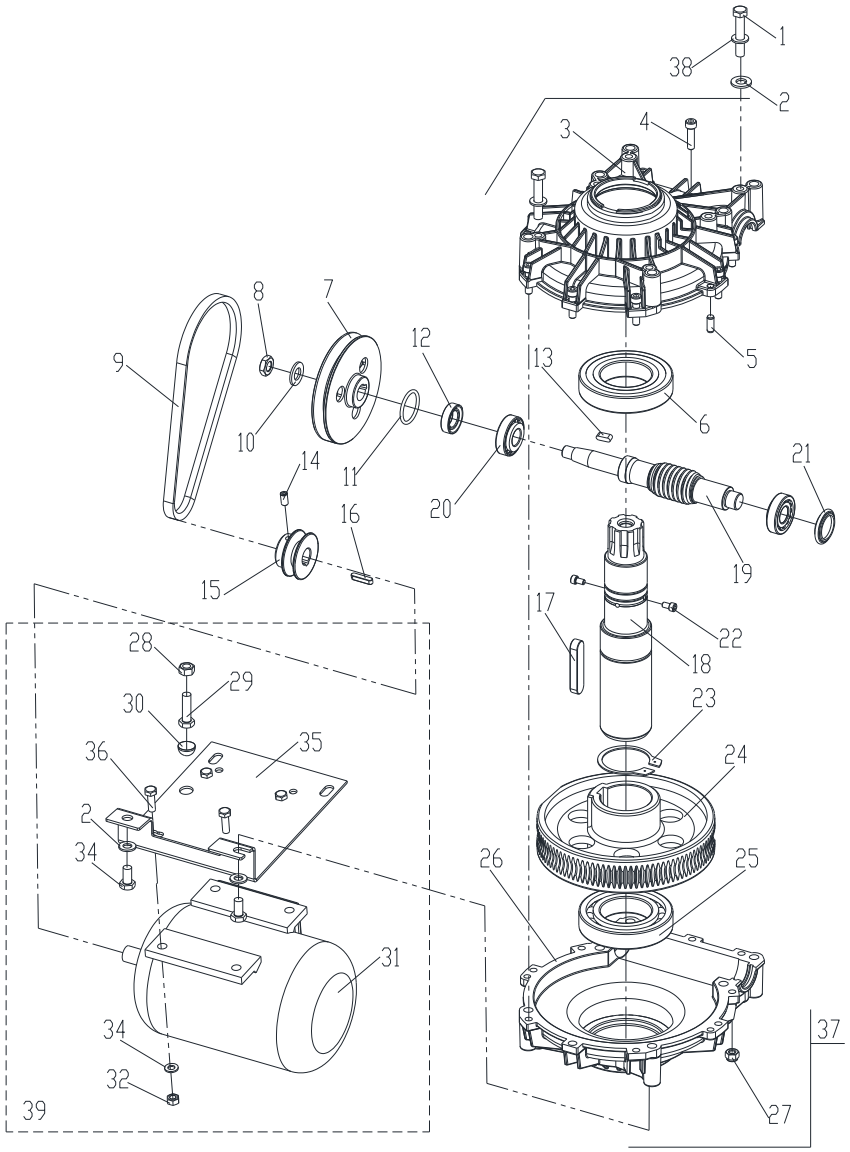

REV. 12 2016

TAV.4.0	MOTOR – REDUCTION GEAR GROUP	ED. 10/16

ITEM	PART NUMBER	DESCRIPTION	QTY	REMARK
1	0201069	Screw M10X55 - GB/T5780	6	
2	0205011	Washer D.10 - GB/T97.1	8	
3	YC1-3010872	Top gear box	1	
4	0202049	Screw M8X30 - GB/T70.1	10	
5	0213011	Elastic pin 8X20- GB/T119.1	2	
6	0214006	Bearing 6212-2RS - GB/T276	1	
7	YC1-3199596	Gear box pulley	1	
8	0204013	Nut M14 - GB/T6172.1	1	
9	0511052	V belt A580	1	
10	0205017	Washer D.14 - GB/T97.1	1	
11	0606005	O-ring 34.5X3.55 - GB/T3452.1	1	
12	YC1-4296942	Seal	1	
13	0213028	Tab 6X18 - GB/T1096	1	
14	0209009	Screw M8X16 - GB/T80	1	
15	YC1-3000166	Motor pulley	1	
16	202W-ZYDJPJ	Tab 6X30 - GB/T1096	1	
17	0213027	Tab 16X70 - GB/T1096	1	
18	YC1-3010885	Helical gear stud	1	
19	YC1-3010883	Worm	1	
20	0214007	Bearing 30204 - GB/T297	2	
21	YC1-3010886	Seal cap	1	
22	0202030	Screw M6X10 - GB/T70.1	2	
23	0212010	Seeger D.60 - GB/T894.1	1	
24	YC1-3015537	Helical gear	1	
25	0214005	Bearing 6212 - GB/T276	1	
26	YC1-3010873	Bottom gear box	1	
27	0204004	Nut M8 - GB/T889.1	10	

28	0203009	Nut M10 - GB52	1
29	0201050	Screw M10X35 - GB/T5783	1
30	YC1-3000164	Spherical washer	1
31a	0509097	Motor 110V/60Hz/1PH/1.1KW	1
31b	0509016	Motor 220V/50Hz/1PH/0.75KW	1
31c	0509065	Motor 230V/50Hz/1PH/0.75KW	1
31d	0509050	Motor 400V/50Hz/3PH/0.8/1.1KW	1
32	0203029	Nut M8 - GB/T6170	4
33	0205008	Washer D.8 - GB/T97.1	4
34	0201062	Screw M10X20 - GB/T5783	2
35	YC1-3000149A	Motor support	1
36	0201038	Screw M8X25 - GB/T5783	4
37	YC1-2011967	Reduction gear unit	1
38	0208007	Washer D.10 - GB/T93	6
39	YC1-2002001	Motor unit	1

TAV.5.0	BEAD BREAKER	ED. 10/16

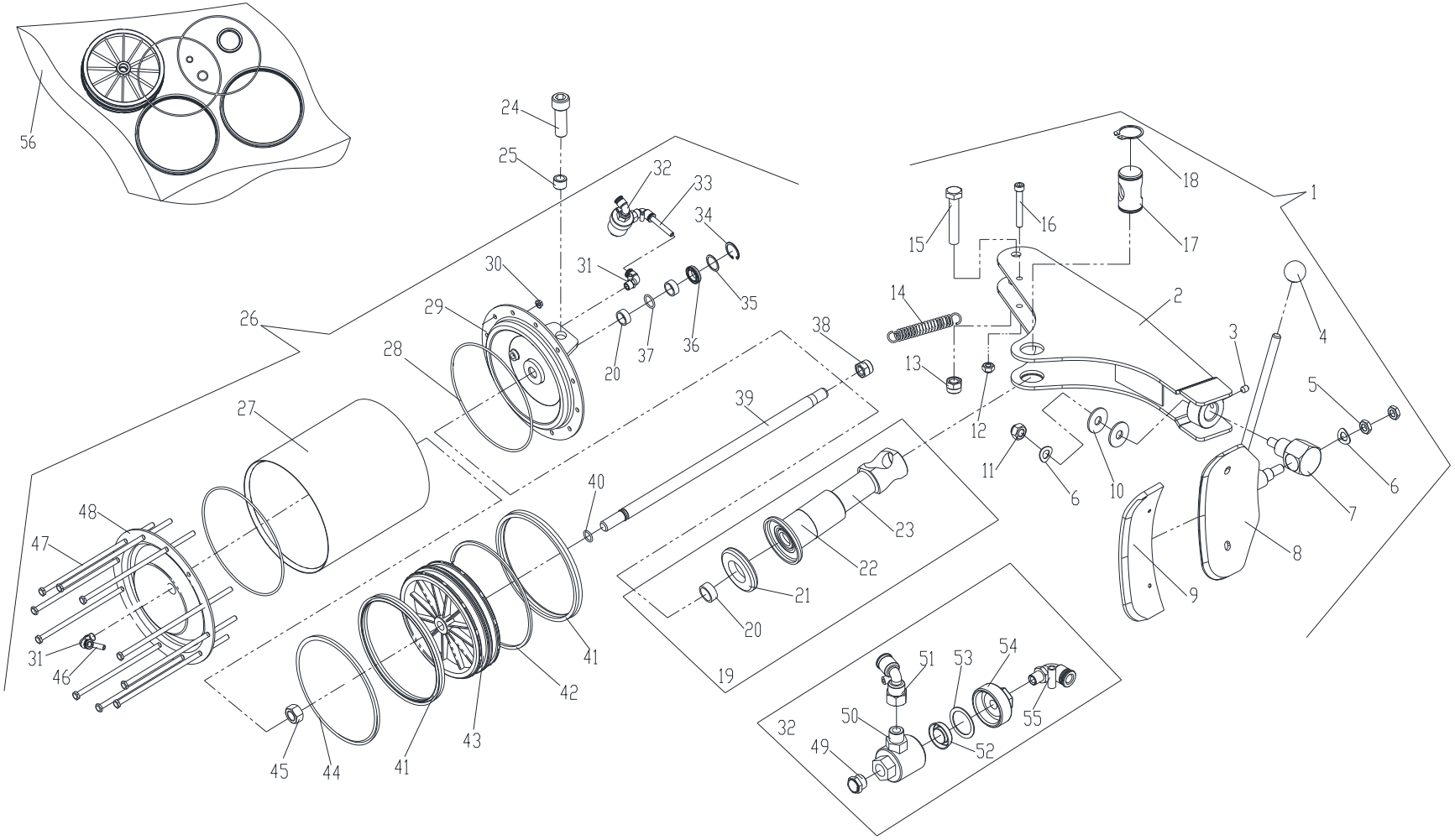

REV. 12 2016

TAV.5.0	BEAD BREAKER	ED. 10/16

ITEM	PART NUMBER	DESCRIPTION	QTY	REMARK
1	C26C400000	Bead breaker arm assembly	1	
2	C26C400100	Bead break arm	1	
3	0209044	Screw M10X12	1	
4	YC1-4299952	Ball	1	
5	0204013	Nut M14 - GB/T6172.1	2	
6	0211015	Elastic washer D.14	2	
7	YC2-3010293	Pivot	1	
8	YC1-2412271	Bead breaker plate	1	
9	YC1-3013240	Protection cover	1	
10	0205016	Washer 14	2	
11	0204006	Self-locking nut M14 - GB/T889.1	1	
12	0204005	Self-locking nut M10 - GB/T889.1	1	
13	0204008	Self-locking nut M16 - GB/T889.1	1	
14	YC1-3000114A	Arm spring	1	
15	0201099	Screw M16X90 - GB/T5782	1	
16	0202057	Screw M10X70 - GB/T70.1	1	
17	YC1-3008990	Pivot pin	1	
18	0212008	Seeger D.40 - GB/T894.1	2	
19	C08C410000	Adjusted limit stroke	1	
20	0305041	Guide ring 67X9.5X2	3	
21	C08C410002	Rubber limit	1	
22	C08C410100	Shaft sleeve	1	
23	C08C410001	Shaft	1	
24	0202071	Screw M12X35 - GB/T70.1	2	
25	YC1-3015573	Bush	2	
26	C00AQ10000	Bead breaker cylinder	1	
27	C00AQ10001	Cylinder liner 200X227.5	1	

28	0309104	O-ring 195X3.55	2
29	C207010100	Front flange	1
30	0204025	Flange nut M8 - GB/T6177.1	12
31	0306032	90° quick union 8-1/4	2
32	C02AQ00100	Quick discharge valve unit	1
33	0306097	Rilsan hose 8X5 L=700	1
34	0211004	Seeger D.30 - GB/T893.1	1
35	YC1-4398146	Washer	1
36	0606016	Scraper 20X30X7	1
37	0606004	O-ring 20X2.75	1
38	0204009	Self-locking nut M18 - GB/T889.1	1
39	YC1-3015834-B	Piston rod	1
40	0309084	O-ring 16X2.65	1
41	C207010004	Seal 188X200X12	2
42	C207010001	Guiding ring	1
43	C207010002	Piston	1
44	C207010008	Seal support ring	2
45	0203022	Nut M18X1.5 - GB/T6171	1
46	0306097	Rilsan hose 8X5 L=750	1
47	0201175	Screw M8X248	12
48	C207010007	Back flange	1
49	0306086	Silencer G1/4	1
50	C02AQ00101	Valve body	1
51	0306039	Quick union 8-1/4	1
52	C02AQ00104	Seal	1
53	C02AQ00103	Seal	1
54	C02AQ00102	Valve cover	1

55	0306033	90° quick union 8-R1/8	1
56	93Y200214	Bead breaker cylinder repair kit	1

TAV.6.0	SELF-CENTERING TURNTABLE	ED. 10/16

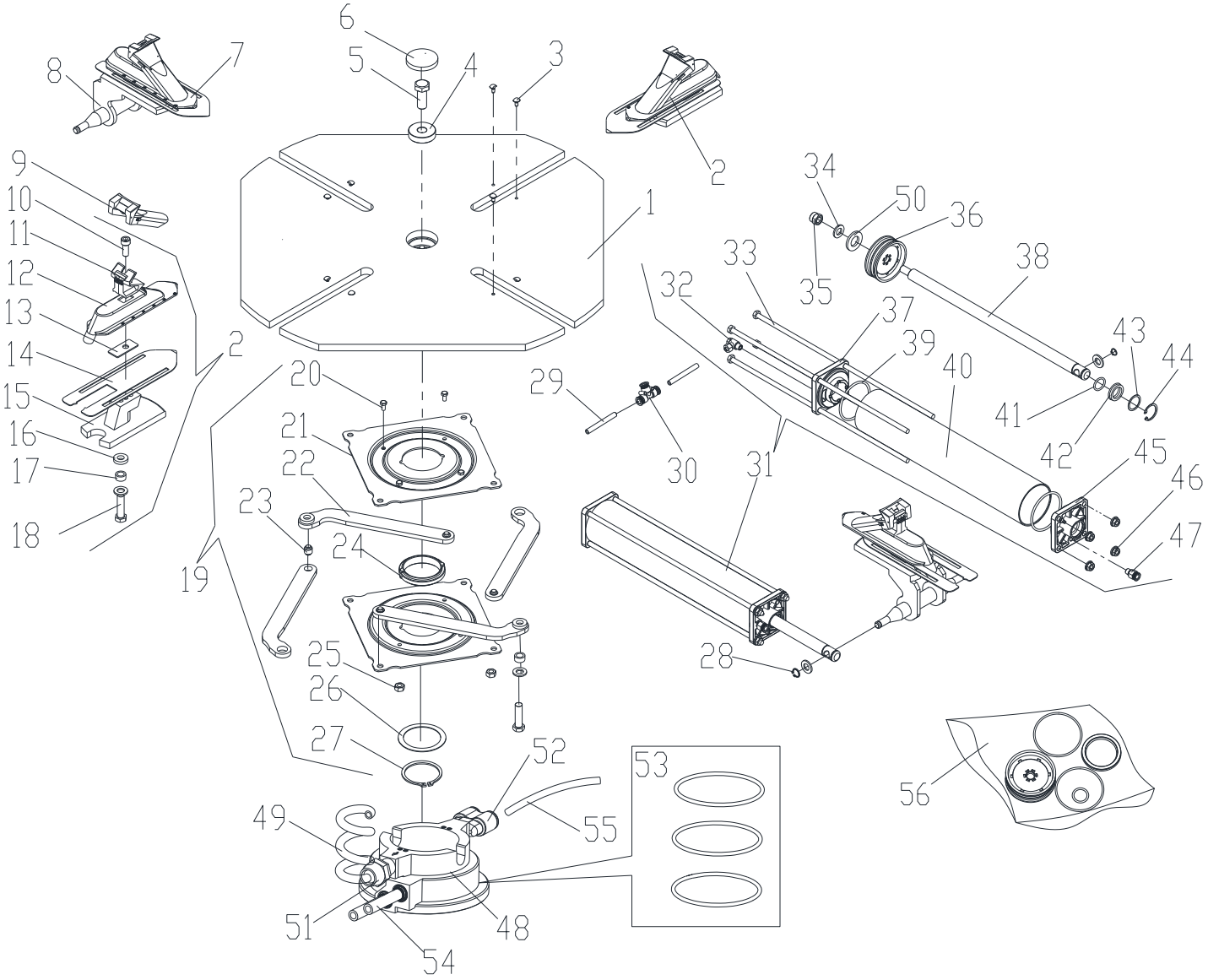

REV. 12 2016

TAV.6.0	SELF-CENTERING TURNTABLE	ED. 10/16

ITEM	PART NUMBER	DESCRIPTION	QTY	REMARK
1	C26B610000	Turntable	1	
2	C26B600200	Slide guide assembly	2	
3	0215027	Rivet 5.05×15.5	8	
4	YC1-3009778	Washer	1	
5	0201100	Screw M16X1.5X40 - GB/T5786	1	
6	YC1-3000062	Turntable cap	1	
7	C26B600300	Slide guide assembly	2	
8	YC1-2415756	Slide guide	2	
9	YC1-3001468	Clamp cover	4	
10	0202055	Screw M10X1.25X25 - GB/T70.1	4	
11	YC1-3002297	Oversize clamp	4	
12	YC1-3006255	Slide	4	
13	104-3015858	Spacer	4	
14	104-3015171-B	Turntable plate	4	
15	YC1-2412860	Slide	2	
16	YC1-3006879	Spacer	4	
17	YC1-3006880	Connection rod spacer	4	
18	0201143	Screw M12X45	4	
19	104-2007001	Turntable flange assembly	1	
20	0201011	Screw M6X12	4	
21	YC1-3006869	Turntable flange	2	
22	104-3011876-A	Connecting plate	4	
23	YC1-3006878	Shaft	4	
24	YC1-3007420	Shaft sleeve	1	
25	0203004	Nut M6 - GB52	4	
26	YC1-3006869-A	Connection rod spacer	1	
27	0212011	Seeger D.65 - GB/T894.1	1	

28	0212001	Seeger D.12 - GB/T894.1	4	
29	0306097	Rilsan hose 8X5 L=140	1	
30	0306022	Quick T union D.8	1	Plastic
31	C26B600100	Turntable cylinder	2	
32	0306016	Union Φ8 G1-8	2	
33	0201222	Screw M8X382	8	
34	0205013	Washer D.12 - GB/T97.1	10	
35	0204007	Nut M12 - GB/T889.1	2	
36	YC1-4198856	Piston	2	
37	YC1-3015023A	Flange	2	
38	C26B600102	Piston rod	2	
39	0606007	O-ring 75X3.1 - GB/T1235	4	
40	C26B600101	Cylinder liner	2	
41	0606004	O-ring 20X2.75 - GB/T3452.1	2	
42	0606016	Scraper 20X30X7	2	
43	YC1-4398146	Washer	2	
44	0211004	Seeger D.30 - GB/T893.1	2	
45	YC1-3015024A	Flange	2	
46	0204025	Nut M8 - GB/T6177.1	8	
47	0306045	Quick union 8-1/8	2	Plastic
48	YC1-2003000	Rotation union	1	
49	0306103	Spiral hose 8X5	1	
50	YC1-4198857	Washer	2	
51	0306069	Rotation union 8-1/8	1	
52	0306001	Quick T union 8-1/8	1	
53	0309066	O-ring 60X2.65	3	
54	0306097	Rilsan hose 8X5 L=1000	2	

55	0306097	Rilsan hose 8X5 L=350	2
56	93Y200215	Turntable cylinder repair kit	1

TAV.7.0	INFLATOR+LUBRICATION GROUP	ED. 10/16

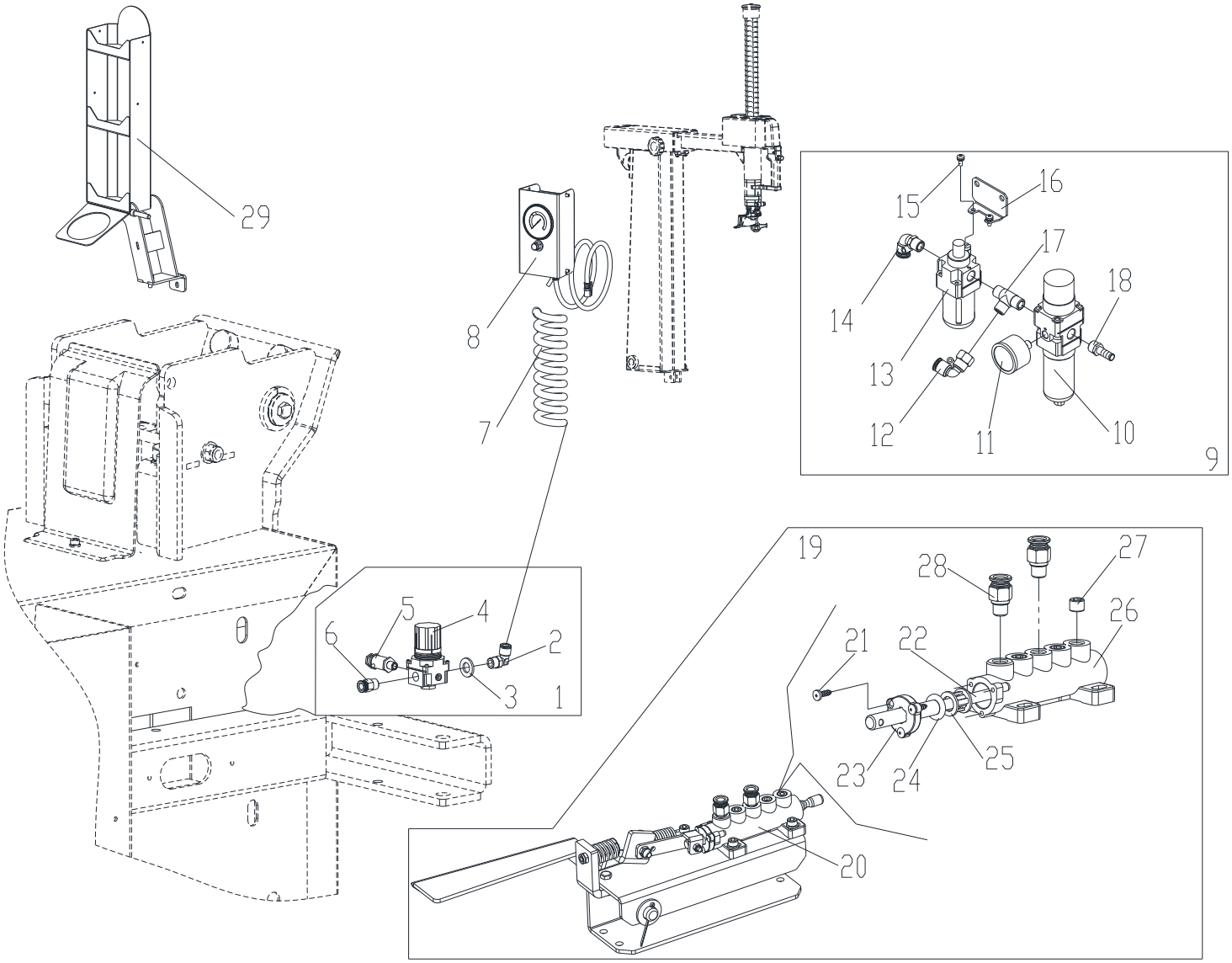

REV. 12 2016

TAV.7.0	INFLATOR+LUBRICATION GROUP	ED. 10/16

ITEM	PART NUMBER	DESCRIPTION	QTY	REMARK
1	YC2-2010781-1	Safety valve unit 3.5bar	1	
2	0306037	90° quick union 8-1/4	1	plastic
3	0205013	Washer D.12 - GB/T97.1	1	
4	0306327	Pressure regulator	1	
5	0306106	Pressure relief valve G1/8 5.5bar	1	
6	0306044	Quick union 8-1/4	1	plastic
7	0306157	Spiral hose 8X5.5 L=1500	1	
8	YC2-2014217A	Pressure gauge	1	
9	YC2-2012326-2	SMC lubricator + filter regulator	1	
10	0306278	AW20-F02C-2R-A filter	1	
11	0306052	Pressure gauge C1-G36-10-01	1	G1/8
12	0306039	90° quick union 8-1/4	1	
13	0306187	AL20-F02-CR-A lubricator	1	
14	0306032	90° quick union 8-1/4	1	
15	0206059	Screw M4X8	2	
16	C00AQ51001	Support	1	
17	0306077	G1/4	1	
18	0306008	Quick union 8-1/4	1	
19	C24E720000	Air inflator control unit	1	
20	C24E721000	Valve unit	1	
21	0207032	Self-tapping screw ST3.5X13 - GB/T845	3	
22	YC2-3001849	Valve pin	1	
23	YC1-3001585	Valve flange	1	
24	YC1-4299000	O-ring	6	
25	YC1-3001584	Valve spacer	5	
26	YC1-3001583	Valve body	1	
27	0305014	Plug 1/8	2	

28	0306045	Quick union 8-1/8	2
29	C01A000000	Tool box	1